KS33
WIRE GRID

Cat. No.

KS33 WIREGRID

BARCLAY

Features:

►Fits bottom of KS33 undermount sink
►Rubber Feet Covers Included

Finish:
SS Stainless Steel

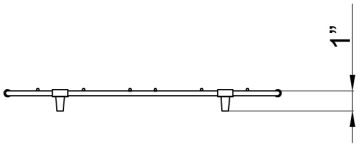

W: 13-¾”
D: 14-¾”
H: 1”

Drain Hole : 4-¾”

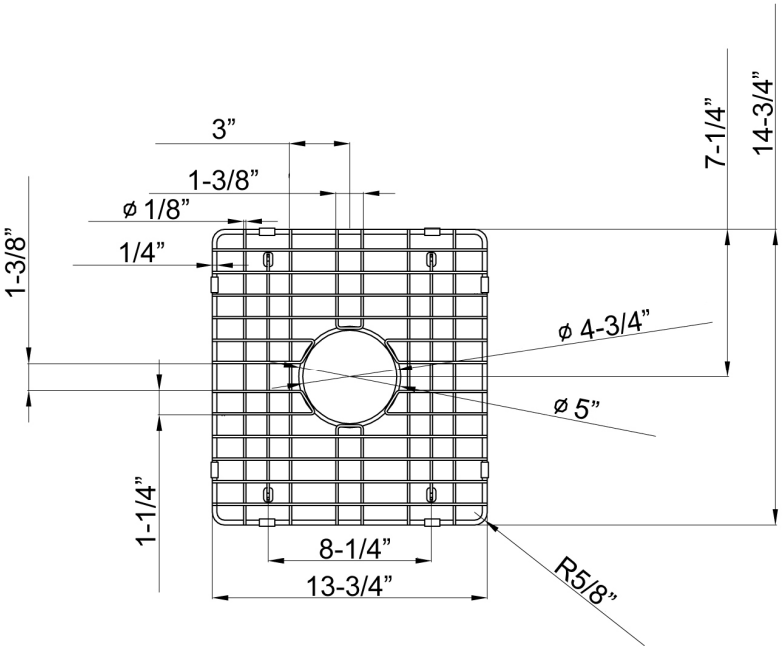

Dimensions and specifications subject to change without notice.